Panasonic®

Installation and Operating Instructions

English

Energy Recovery Ventilator

Availability of replacement parts, repair services, and information for maintenance or repair

Spare parts

Available through authorized dealer/contractor only

Repair services

Available through authorized dealer/contractor only

Information for maintenance or repair

Customer maintenance covered in Owner's Manual

Model No. FV-16VEC1T FV-16VEC1S
FV-13VEC1T FV-13VEC1S
FV-15VE1T FV-15VE1S
FV-12VE1T FV-12VE1S

Representative models:

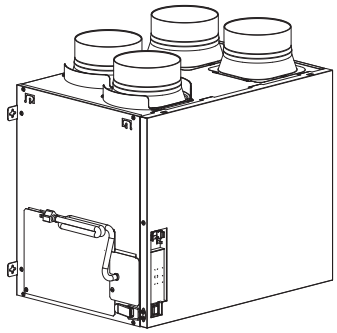

FV-16VEC1T FV-15VE1T
FV-13VEC1T FV-12VE1T

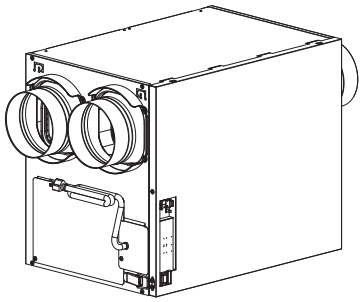

FV-16VEC1S FV-15VE1S
FV-13VEC1S FV-12VE1S

CONTENTS

GENERAL SAFETY INFORMATION ..... 2 - 3
DESCRIPTION AND SUPPLIED ACCESSORIES 4
WIRING DIAGRAM 5
WIRING METHOD ..... 5 - 7
INSTALLATION Ⅰ (WALL MOUNT) 8
INSTALLATION Ⅱ (CHAIN MOUNT) 9
DUCT INSTALLATION ..... 10 - 15
OPERATION ..... 16 - 17
MAINTENANCE ..... 18 - 19
TROUBLESHOOTING ..... 20 - 21
Wi-Fi CONTROL MODULE 21
SPECIFICATIONS 22
WARRANTY 23
PRODUCT SERVICE ..... BACK COVER

This manual is also available online.

READ AND SAVE THESE INSTRUCTIONS

Thank you for purchasing this Panasonic product.
Please read these instructions carefully before attempting to install, operate or service the product. Please carefully read the "GENERAL SAFETY INFORMATION" (P.2 - 3) of this manual before use. Failure to comply with instructions could result in personal injury or property damage. Please explain to users how to operate and maintain the product after installation, and this manual should be presented to and retained by the end users for future reference.

16VC1T450B

GENERAL SAFETY INFORMATION

For Your Safety

To reduce the risk of injury, loss of life, electric shock, fire, malfunction, and damage to equipment or property, always observe the following safety precautions.

Explanation of symbol word panels

The following symbol word panels are used to classify and describe the level of hazard, injury, and property damage caused when the denotation is disregarded and improper use is performed.

⚠ WARNING	Denotes a potential hazard that could result in death or serious injury.
⚠ CAUTION	Denotes a hazard that could result in minor injury.
NOTICE	Denotes a hazard that could result in property damage.

The following symbols are used to classify and describe the type of instructions to be observed.

🛇	This symbol is used to alert users to a specific operating procedure that must not be performed.
❗	This symbol is used to alert users to a specific operating procedure that must be followed in order to operate the unit safely.
🛇	This symbol is used to alert users not to disassemble the equipment.
⏚	This symbol is used to alert users to make sure of grounding when using the equipment with the grounding terminal.

⚠ WARNING

- 🛇 When cutting or drilling into wall or ceiling, be careful not to damage electrical wiring and other hidden utilities.
- 🛇 Solid state controls may cause harmonic distortion which can cause motor humming noise. To reduce the risk of fire or electric shock, do not use this unit with any non-approved control device.
- 🛇 Never install the unit in a high humidity space, such as a bathroom, kitchen or laundry room.
- 🛇 Do not install with a method which is not approved in the instructions.
- 🛇 Do not disassemble the unit. It may cause fire or electric shock.
- ❗ Use this unit only in the manner intended by Panasonic. If you have any questions, contact Customer Service.
- ❗ Installation work and electrical wiring must be performed by qualified person(s) in accordance with all applicable codes and standards, including fire-rated construction.
- ❗ Ceiling joist and wall stud must be able to withstand a static load more than five times the weight of the product.

GENERAL SAFETY INFORMATION

- The special-purpose or dedicated parts, such as mounting fixtures, must be used if such parts are provided.
- Sufficient air is needed for proper combustion and exhausting of gases through the flue (chimney) of fuel burning equipment to prevent backdrafting. Follow the heating equipment manufacturer's guideline and safety standards such as those published by the National Fire Protection Association (NFPA), and the American Society for Heating Refrigeration and Air Conditioning Engineers (ASHRAE) and the local code authorities.
- Install the unit in the area where air temperature is above 50 °F (10 °C) to avoid condensation in unit.

⚠ CAUTION

- For general ventilating use only. Do not use to exhaust hazardous or explosive materials and vapors.
- Do not kink the power cord.
- Do not install the unit in an area where the air stream temperature may exceed 104 °F (40 °C).
- The unit must be installed in a conditioned space such as a mechanical room or basement.
- The OA duct and EA duct must be connected directly to the outside.
  Refer to local codes for termination locations.
- Make certain that the electric service supply voltage is AC 120 V, 60 Hz.
- Follow all local electrical and safety codes, as well as the National Electrical Code (NEC) and the Occupational Safety and Health Act (OSHA).
- Always disconnect the power source before working on or near the fan, motor, fixture or wiring cover.
- Protect the power cord from sharp edges, oil, grease, hot surfaces, chemicals or other objects.
- This product are intended for residential use only.
- When the product is no longer to be used, it must not be left in place but removed, to prevent it from possibly falling.
- Disconnect power by switching off standby switch first, then main switch and unplug before working on unit.

NOTICE

- Do not install the unit where ducts are configured as shown below.

Excessive bending | Successive bending | Squeezed duct | Bend close to duct adapter

DESCRIPTION

Energy Recovery Introduction: ERV can transfer both heat and humidity and recover energy from that humidity. ERV can exchange energy between “stale” EA and “fresh” OA, by transferring heat and moisture into the incoming cold air, and pre-cooling and reducing the humidity of the incoming hot air. This helps maintain a fresh environment even when the heating or cooling system is not operating.

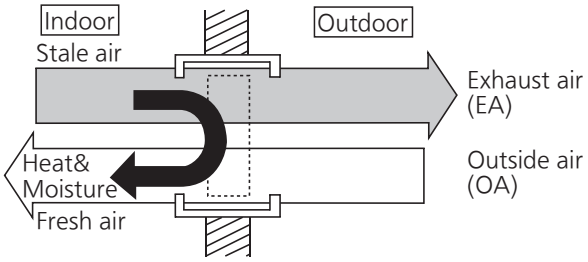

<Heating>

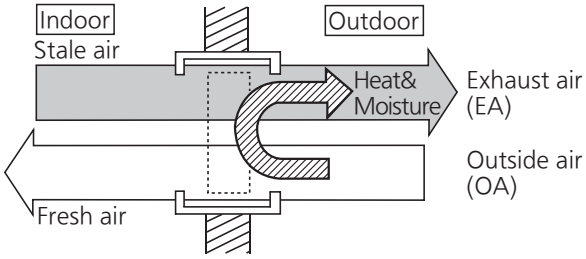

<Cooling>

<Frost prevention operation>

The ERV defrosts automatically according to outdoor temperature.
On FV-16VEC1T/S and FV-13VEC1T/S models, frost prevention operation can be selected from recirculation and exhaust. (see setting configuration)

For FV-16VEC1T/S and FV-13VEC1T/S

Outdoor temp.	Mode	Operation time
>23°F (-5℃)	Vent	Continued
	Defrost	-
23°F (-5℃)- 5°F (-15℃)	Vent	20 min
	Defrost	10 min
5°F (-15℃)- -17°F (-27℃)	Vent	14 min
	Defrost	10 min
-17°F (-27℃)- -22°F (-30℃)	Vent	7 min
	Defrost	10 min
≤-22°F (-30℃)	Vent	Stop
	Defrost	*

For FV-15VE1T/S and FV-12VE1T/S

Outdoor temp.	Mode	Operation time
>23°F (-5℃)	Vent	Continued
	Defrost	-
23°F (-5℃)- 14°F (-10℃)	Vent	20 min
	Defrost	10 min
≤14°F (-10℃)	Vent	Stop
	Defrost	*

*Operates for 4 min per hour to check outdoor temperature.

Note **(1)There are 10 min additional frost prevention every 6 cycles.**
(2)For FV-16VEC1T/S and FV-15VE1T/S, air volume is limited to maximum 130CFM when outdoor temperature is under 23℉(-5℃).
(3)Air volume difference between SA and EA is limited to 20CFM when outdoor temperature is under 23℉(-5℃).

SUPPLIED ACCESSORIES

Part name	Appearance	Quantity
Cover for hardwired connection		1
Hardwired connector		1
L plate		4
Screw (M4X8)		4
Long screw (ST4.2X30)		4
Installation and operating instructions & Warranty sheet		1

WIRING DIAGRAM

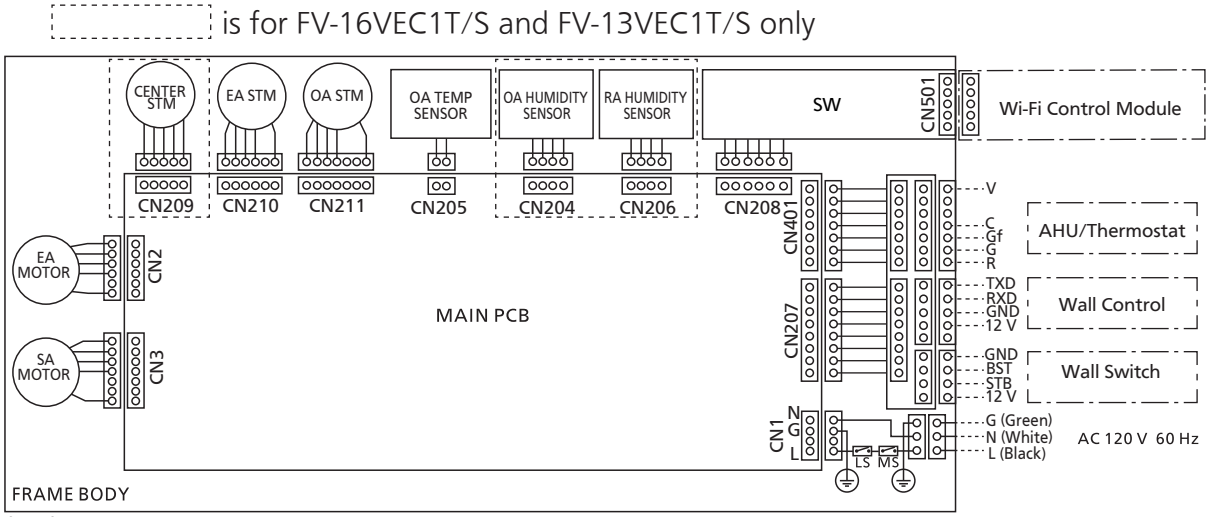

STM : Stepper Motor
LS : Limit Switch
SW : Switch PCB
MS : Main Switch

WIRING METHOD

⚠ WARNING

Installation work and electrical wiring must be performed by qualified person(s) in accordance with all applicable codes and standards, including fire-rated construction, use UL approved wire nuts.

<Hardwired connection (optional)>

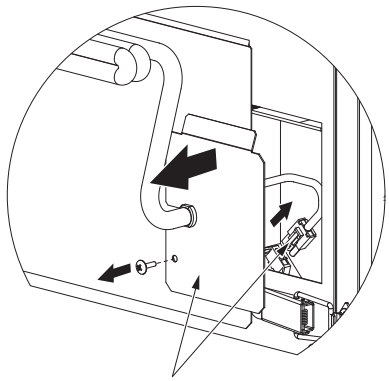

Remove power cord and wiring cover

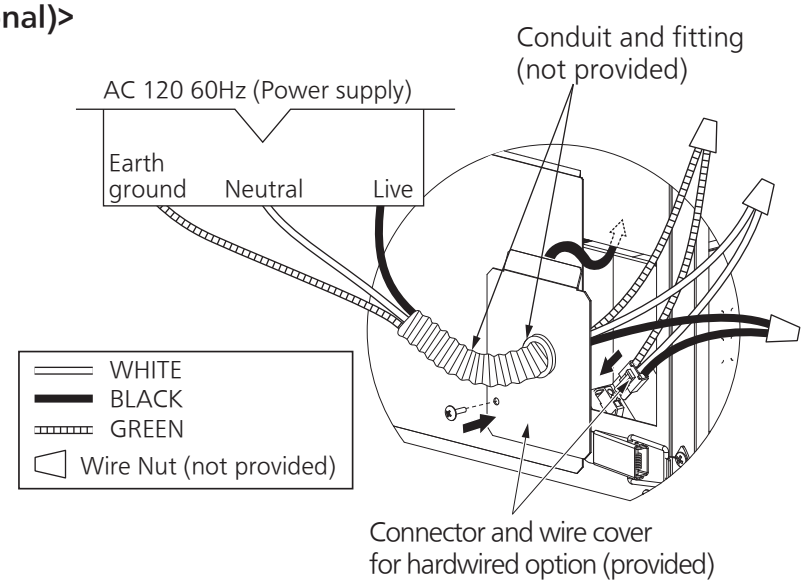

WIRING METHOD

⚠ CAUTION

- Make sure that the all wires are connected to the right terminal.
  Miswiring may cause a permanent damage to the control circuit.
- Do not connect more than one Standby switch.
  Do not connect more than two Boost switches.

Note

(1)The terminal of standby connection has been connected by jumper wire as factory default. If connecting with Standby switch, please remove the jumper wire.

(2)Insert wires into the corresponding terminals deeply through the wire holders. Make sure the screw of the terminal securely fastens the copper wire and the copper wire is not exposed.

(3)Before closing the door, make sure all wires are put through the wire holders.

(4)Recommended wire gauge is 14AWG-24AWG

<Standby/Boost connection>

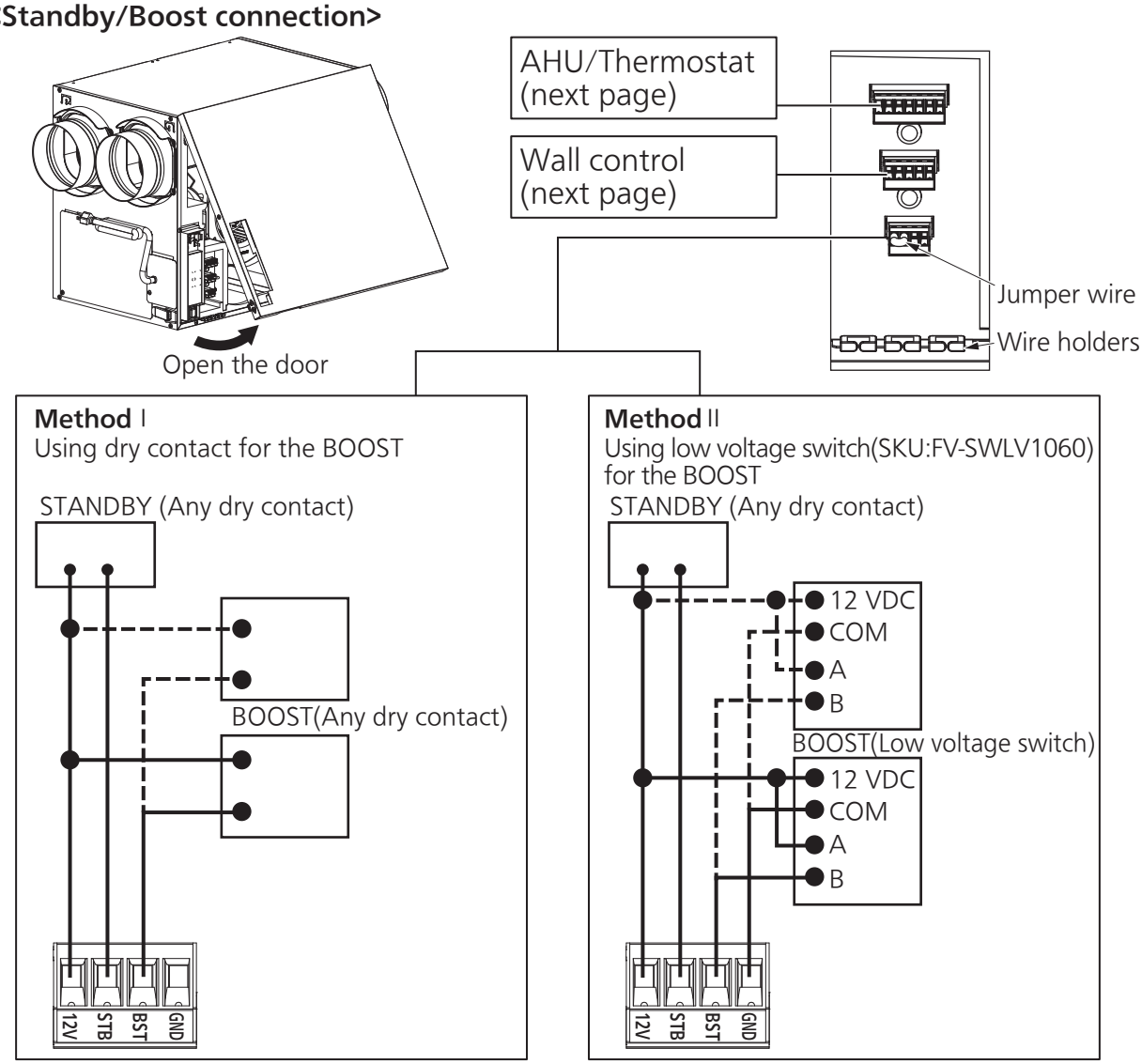

WIRING METHOD

<AHU/Thermostat connection>

These connections allows the unit to synchronize with AHU and thermostat.

Note

These connections are required for installation configuration dC2 and dC4. Refer to duct installation (P.11 and P.13) for more details.

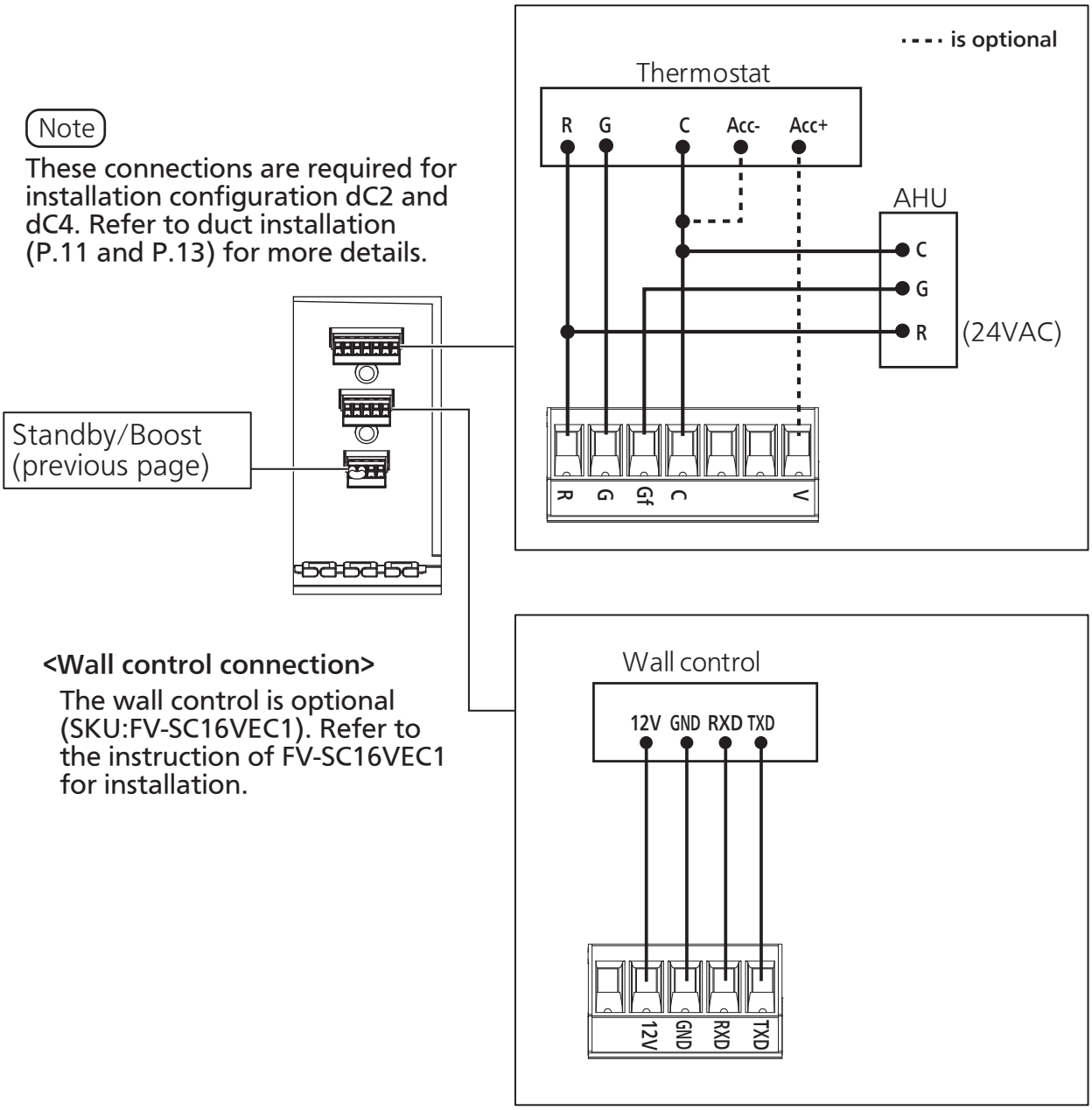

<Wall control connection>

The wall control is optional (SKU:FV-SC16VEC1). Refer to the instruction of FV-SC16VEC1 for installation.

INSTALLATION Ⅰ (WALL MOUNT)

1 Mount L plates.

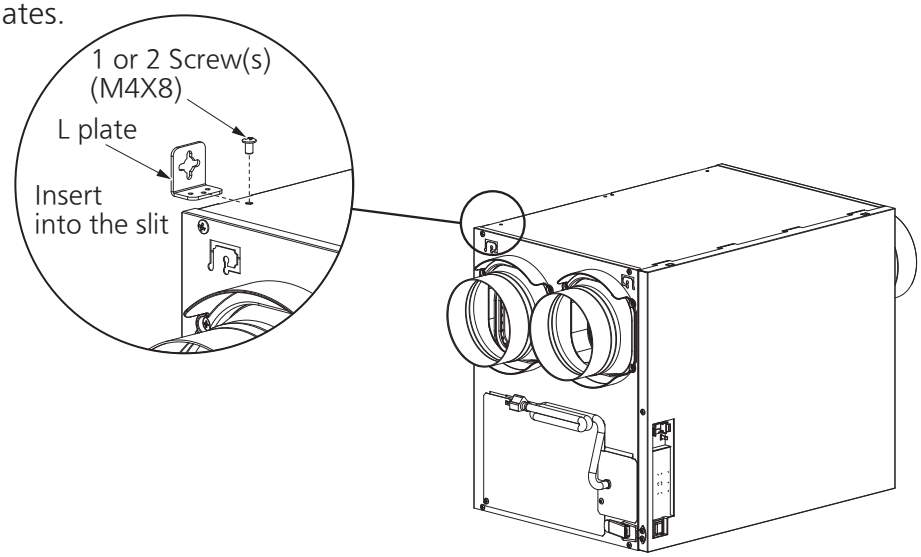

2 Mount ERV to studs with the long screws (ST4.2X30)

Note

Keep 3″ clearance on both sides for servicing.

■Installation with 4 L plates

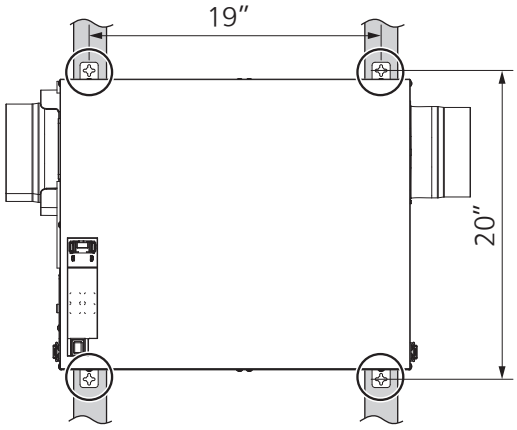

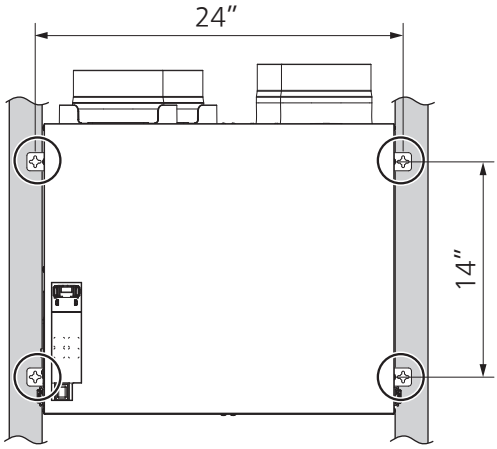

■Installation with 2 L plates

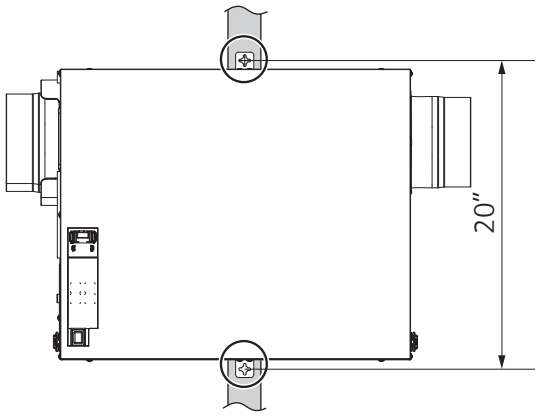

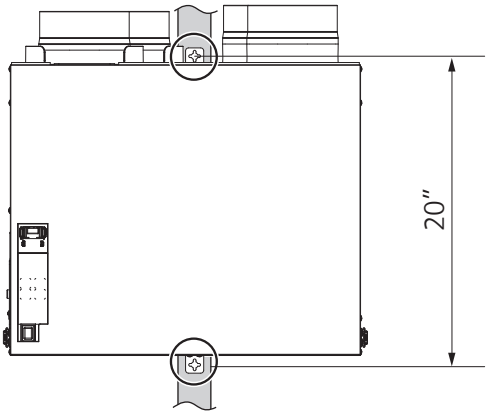

INSTALLATION Ⅱ (CHAIN MOUNT)

1 Slightly bend the hangers on the sides of ERV.

2 Hang the ERV from the joists using chains.

⚠ CAUTION

Do not bend the hangers more than 90°.

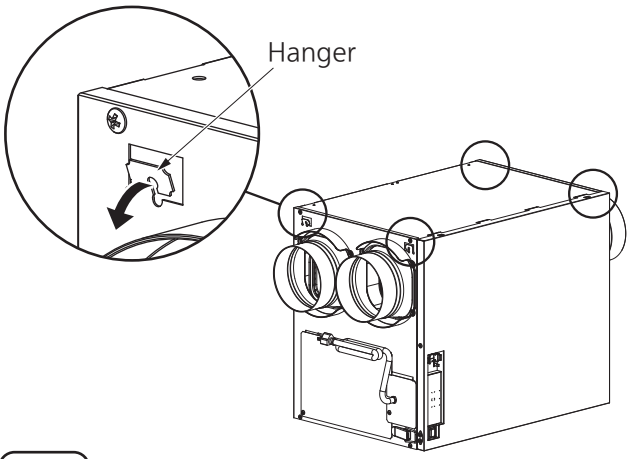

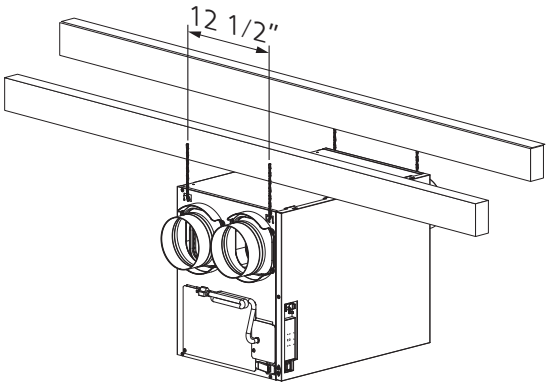

Note

(1)The chains are not provided. Use only chains with a working load limit of 66 lbs. (30 kg) or above.

(2)Make sure ERV is level after installation.

(3)Keep 3" clearance on both sides for servicing.

NOTICE

It is recommended to install;

- in a conditioned space away from living areas (dining room, living room, bedroom).
- by suspending with chains to minimize transmission of vibration.
- using vibration isolation pads for wall installation.
- ducts as straight as possible and minimize the number of elbows.

DUCT INSTALLATION

Method Ⅰ - Fully dedicated ducted installation(dC1)

This method draws return air from specific points in the house where the poorest indoor air quality exists (bathroom and kitchen) and supplies outside air to specific locations (all bedrooms and living areas) of the house. This system is not connected to an AHU.

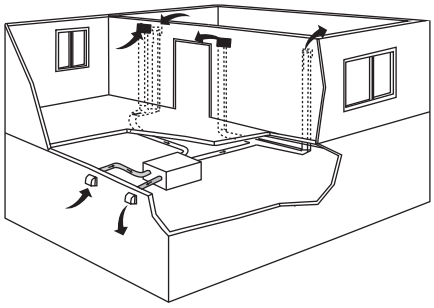

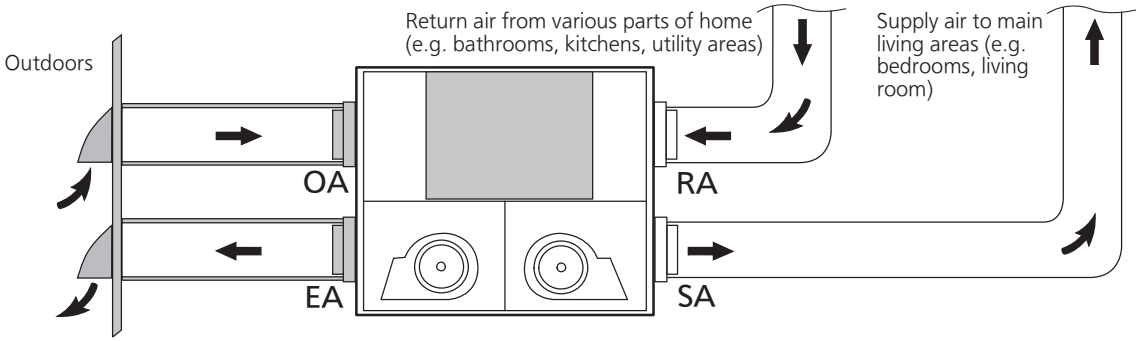

*This simplified figure is for reference only

Note

(1)Check local codes and authority having jurisdiction for acceptance.
(2)Must Have 2-3 ft straight run on all duct attachments points before any elbows.
(3)The distance between two outdoor hoods should be compliant with local codes.
(4)The dC1 option must be selected in configuration setting for this installation (see P.16-17).

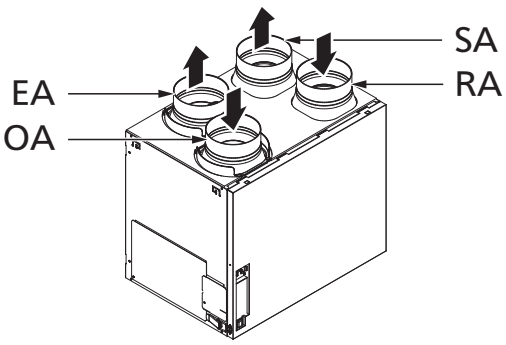

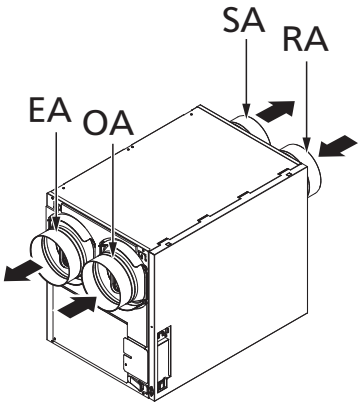

DUCT INSTALLATION

Method Ⅱ - Partially dedicated ducted installation(dC2)

This method draws return air from specific points in the house where the poorest indoor air quality exists (bathroom and kitchen) and supplies an equal amount of outside air into the return air duct of the AHU.
The AHU should be running when the ERV is operating to evenly distribute the outside air throughout the house.

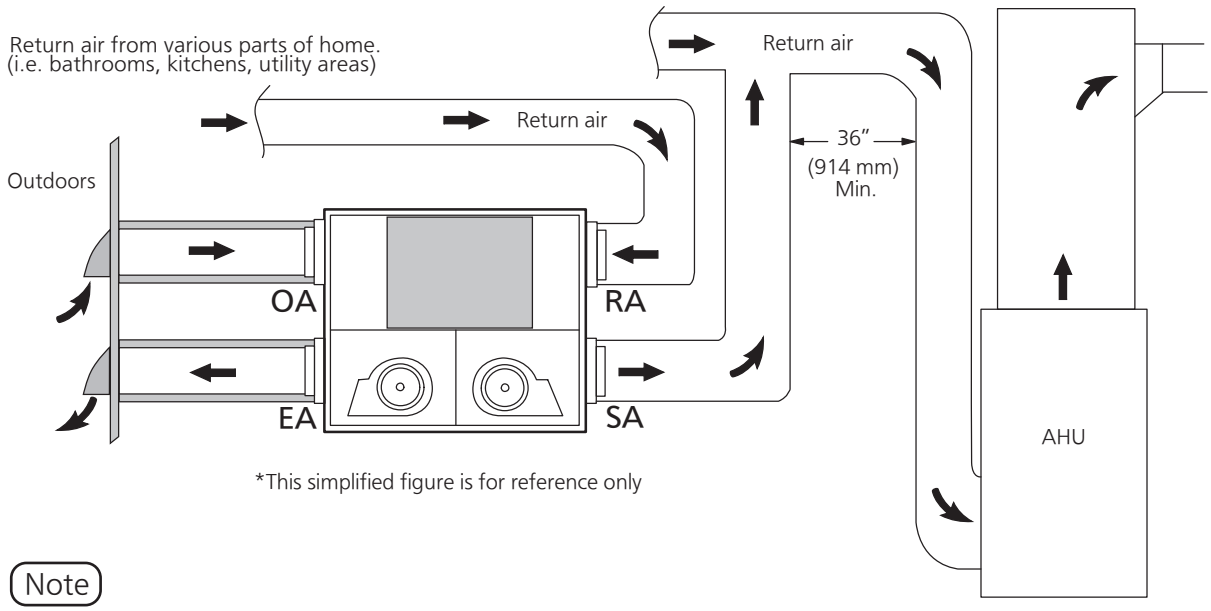

*This simplified figure is for reference only

Note

(1)Check local codes and authority having jurisdiction for acceptance.
(2)Must Have 2-3 ft straight run on all duct attachments points before any elbows.
(3)The distance between two outdoor hoods should be compliant with local codes.
(4)The dC2 option must be selected in configuration setting for this installation (see P.16-17).
(5)It is mandatory that the AHU is synchronized by connecting the signal wires (see P.6-7).
(6)The ERV is normally balanced on high speed with the AHU blower on.

DUCT INSTALLATION

Method Ⅲ- Partially dedicated ducted installation(dC3)

This method draws return air from specific points in the house where the poorest indoor air quality exists (bathroom and kitchen) and supplies an equal amount of outside air into the supply air duct of the AHU.

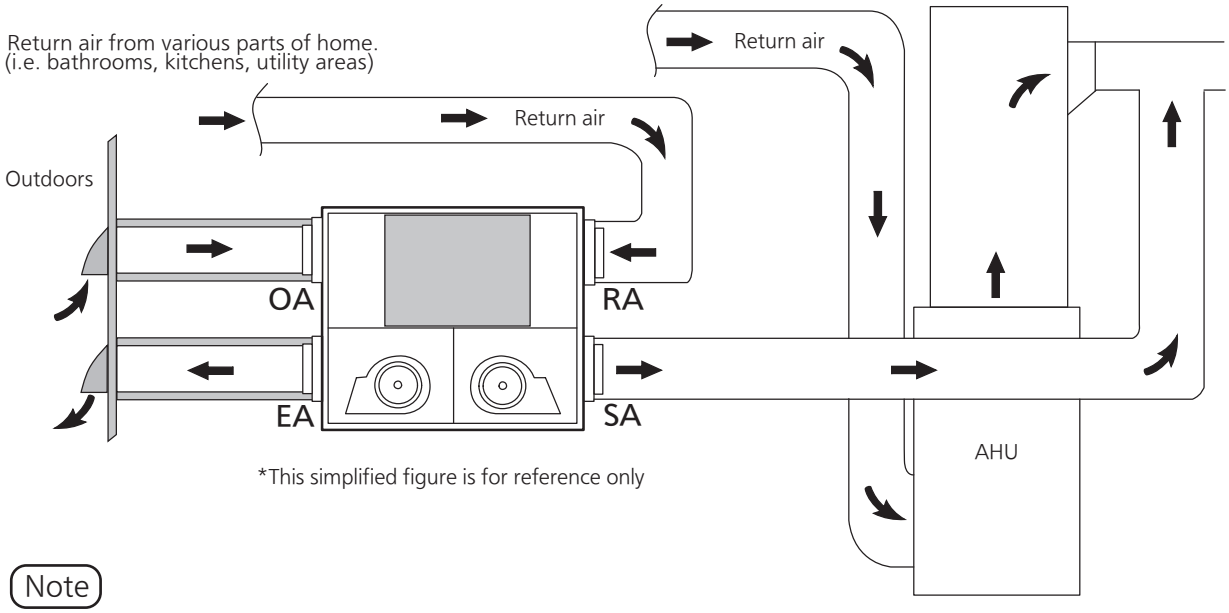

*This simplified figure is for reference only

Note

(1)Check local codes and authority having jurisdiction for acceptance.
(2)Must Have 2-3 ft straight run on all duct attachments points before any elbows.
(3)The distance between two outdoor hoods should be compliant with local codes.
(4)The dC3 option must be selected in configuration setting for this installation (see P.16-17).
(5)It is recommended that AHU is synchronized by connecting the signal wires (see P.6-7).
(6)The ERV is normally balanced on high speed with the AHU blower on.

⚠ CAUTION

To avoid errors caused by high pressures, this configuration is not recommended to be used with a high velocity HVAC/AHU system.

DUCT INSTALLATION

Method Ⅳ- Simplified ducted installation (Return method)(dC4)

This method draws return air from the return air duct of the AHU and supplies an equal amount of outside air farther downstream into the return duct.

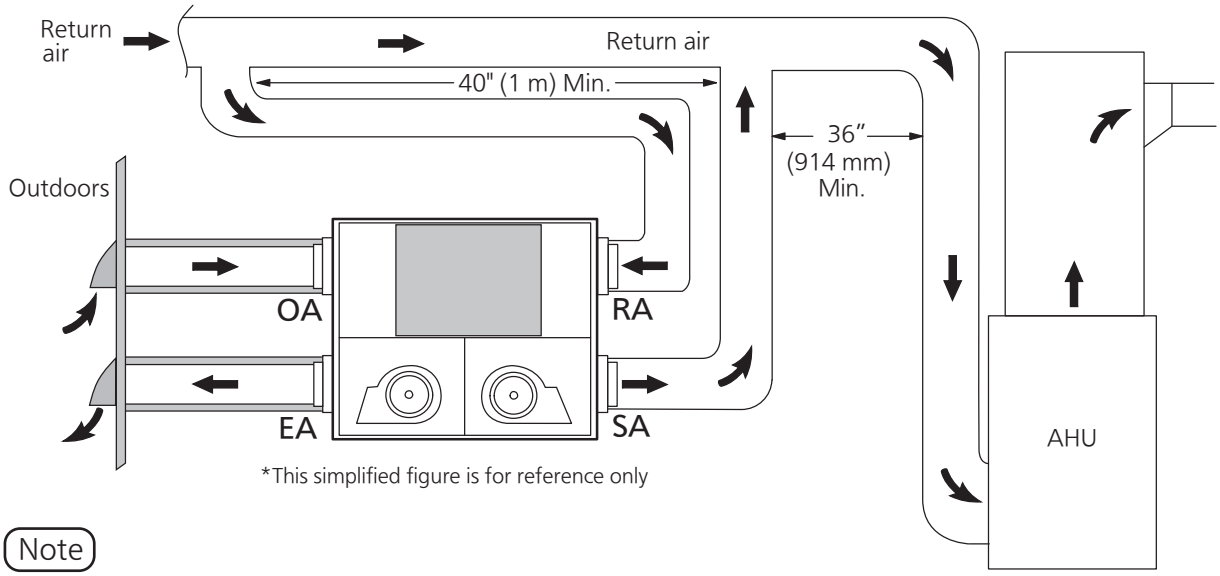

*This simplified figure is for reference only

Note

(1)Check local codes and authority having jurisdiction for acceptance.
(2)Must Have 2-3 ft straight run on all duct attachments points before any elbows.
(3)The distance between two outdoor hoods should be compliant with local codes.
(4)The dC4 option must be selected in configuration setting for this installation (see P.16-17).
(5)It is mandatory that AHU is synchronized by connecting the signal wires (see P.6-7).
(6)The ERV is normally balanced on high speed with the AHU blower on.
(7)This installation does not allow recirculation mode to operate.

DUCT INSTALLATION

Method Ⅴ- Alternate of Method Ⅳ (dC5)

This method draws return air from the return air duct of the air furnace and supplies an equal amount of outside air into the supply air duct of the AHU.

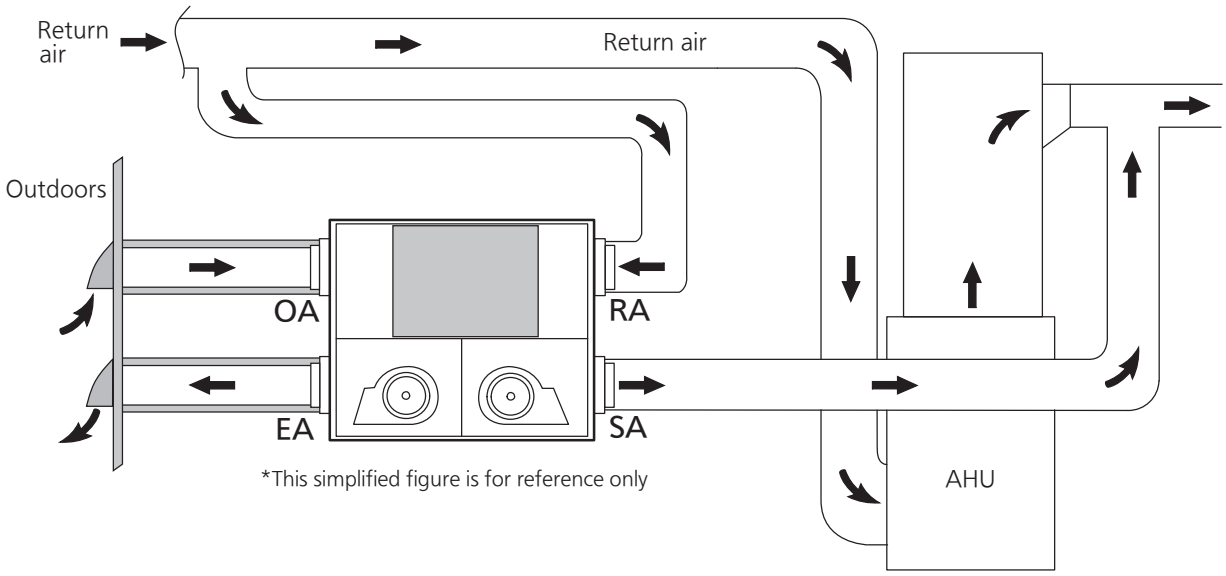

Note

(1)Check local codes and authority having jurisdiction for acceptance.
(2)Must Have 2-3 ft straight run on all duct attachments points before any elbows.
(3)The distance between two outdoor hoods should be compliant with local codes.
(4)The dC5 option must be selected in configuration setting for this installation (see P.16-17).
(5)It is recommended that AHU is synchronized by connecting the signal wires (see P.6-7).
(6)The ERV is normally balanced on high speed with the AHU blower on.
(7)This installation does not allow recirculation mode to operate.

⚠ CAUTION

To avoid errors caused by high pressures, this configuration is not recommended to be used with a high velocity HVAC/AHU system.

DUCT INSTALLATION

1 Install insulated ducts to the OA and EA adapter.

(1)

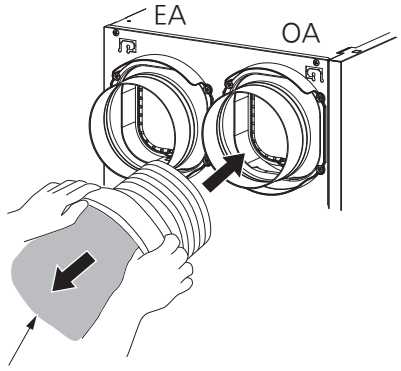

(2)

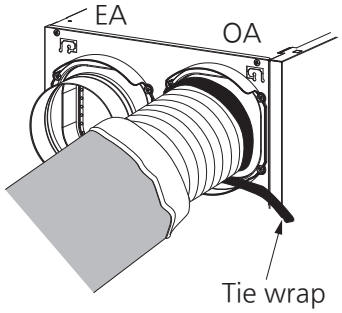

(3)

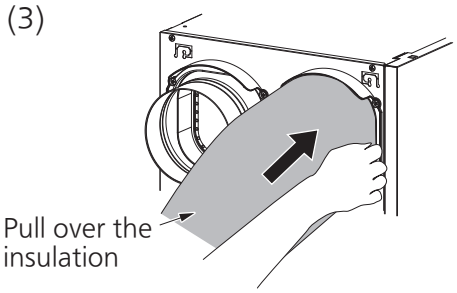

(4)

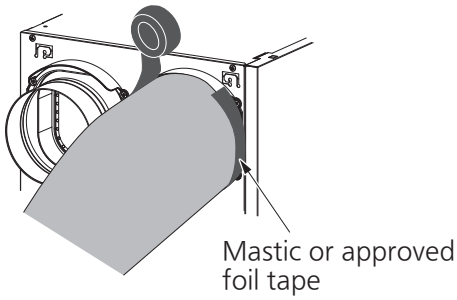

2 Attach duct (rigid galvanized duct, etc.) to the SA and RA adapter.

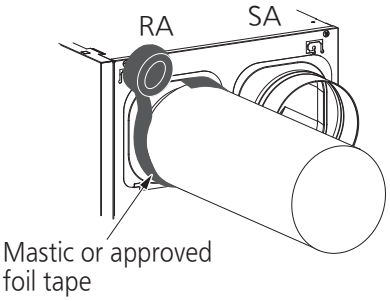

To avoid transmission of vibrations, it is recommended to use a 6-inch section of flexible duct to connect rigid ducts.

3 Install outdoor hood and connect with insulated ducts.

If separate hoods are used, locate them at least 10 ft (3 m) apart.
Seal hoods with caulk or other similar material.

⚠ CAUTION

The intake side duct must be connected to the outside and at least 6 ft (1.8 m) away from the exhaust of appliances such as furnace, dryer, fuel burning appliances, etc.

Note

Please refer to the local codes for detail.

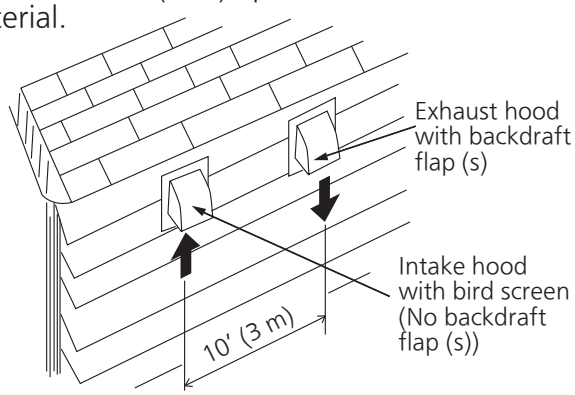

OPERATION

<Control panel>

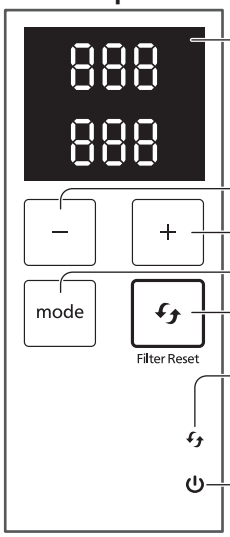

Display: Indicates menu and setting

- button: Decrease a value

+ button: Increase a value

Mode button: Confirm a selection

Filter reset button: Press the button after filter maintenance for resetting accumulated running time.

Filter indicator(Orange):
The indicator will be on when the product accumulated run time reaches to 90 days. The alarm will sound once per hour for a period of ten seconds.

Running indicator(Green):
When the indicator is on, this means the product is running.

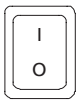

Main switch: Power on or off for ERV. Push the main switch completely to the on/off position when turning on/off.

Note The unit will consume some electricity unless you turn off the main switch. It is recommended to put the unit in standby mode by using a switch or the wall control before turning off the main power switch. This will allow the exterior dampers to close and prevent unwanted passive air flow.

<Display navigation>

Press the mode button to enter the menu selection.
Press +/- button to cycle through settings and press and hold mode button to enter each setting.

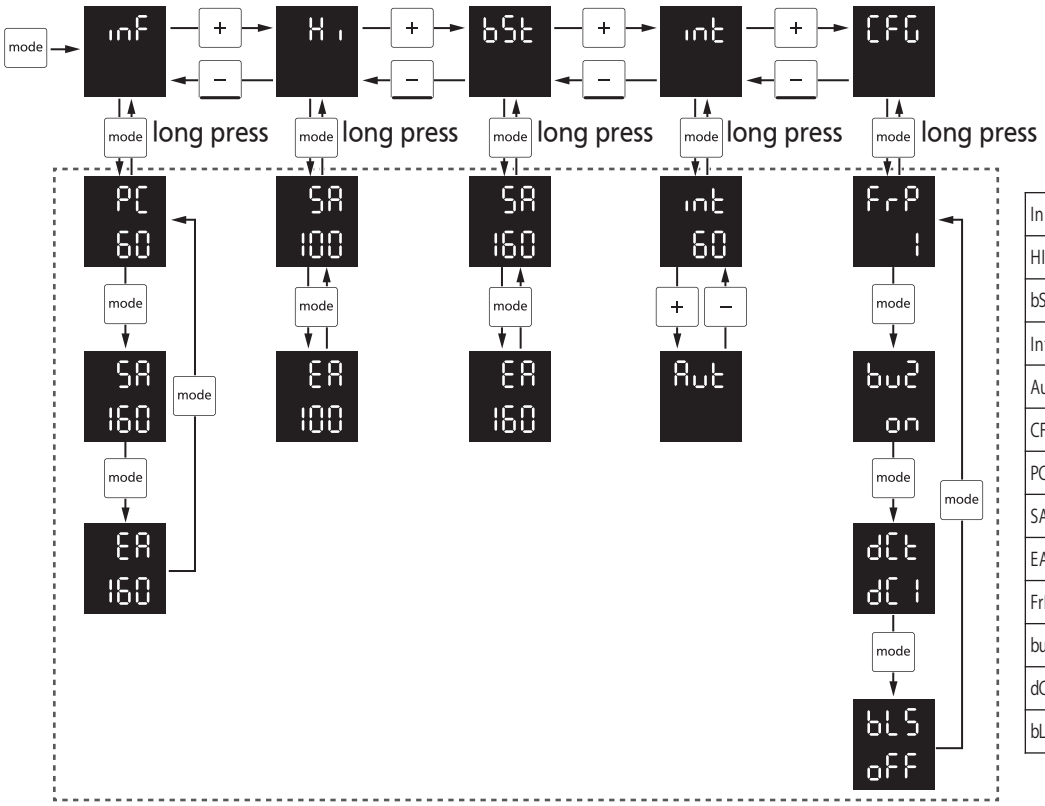

InF	Information
HI	Hi air volume
bSt	Boost air volume
Int	Intermittent runtime
Aut	Automatic runtime mode
CFG	Configuration
PC	Power consumption
SA	Supply air
EA	Exhaust air
FrP	Frost prevention
buZ	Buzzer
dCt	Duct configuration
bLS	Auto balancing mode

OPERATION

<Setting configuration>

Note

In each setting, press and hold the mode button to change.

inF

Information
Indicate the status of ERV

PC : Current power consumption (W)
SA : Current supply air volume (CFM)
EA : Current exhaust air volume (CFM)

Hi

Hi air volume
Set the air volume of ventilation

SA : Set the supply air volume (CFM) by +/- button
EA : Set the exhaust air volume (CFM) by +/- button

Note

To use Lo air volume setting, wall control FV-SC16VEC1 must be connected (sold separately)

bSt

Boost air volume
Set the air volume when boost switch (optional) is on.

SA : Set the supply air volume (CFM) by +/- button
EA : Set the exhaust air volume (CFM) by +/- button

Note

When Boost is set lower than Hi, Hi will decrease accordingly.

int

Intermittent runtime
Set the ASHRAE timer

Set the runtime (min/h) by +/- button
Aut: The runtime will be automatically set as follows according to outdoor temperature.

Outdoor temperature	Runtime(min/h)
Less than -25℃ (-13℉)	15
-25℃ to -7℃ (-13℉ to 19℉)	20
-7℃ to 10℃ (19℉ to 50℉)	40
10℃ to 25℃ (50℉ to 77℉)	60
25℃ to 28℃ (77℉ to 82℉)	30
28℃ to 33℃ (82℉ to 91℉)	20
Above 33℃ (91℉)	15

CFG

Configuration
Set other options

FrP : Set frost prevention mode by +/- button
(FV-16VEC1T/S and FV-13VEC1T/S only)
1: Recirculation (factory setting)
2: Exhaust
buZ : Set the filter buzzer by +/- button
on (factory setting)
oFF
dCt : Set the duct configuration by +/- button
dC1 to dC5 (refer to DUCT INSTALLATION)
bLS : Set the auto balancing mode by +/- button
on
oFF (factory setting)

Note

When the auto balancing mode is on, if the air volume of either the supply or exhaust is reduced, the other will be adjusted automatically.

MAINTENANCE

⚠ CAUTION

- Electric shock may result. Disconnect power by switching off main switch, then unplug before working on the unit. If a standby switch is connected, it is recommended to switch it off first.
- Routine maintenance must be performed every 2 or 3 months. Clogged filters may cause condensation on the unit due to air flow reduction.
- Please wear gloves to avoid pinching fingers during maintenance.
- Please pay attention to dust, condensation water, or parts that may drop down when the door is opened.
- Never use gasoline, benzene, thinner or any other such chemicals to clean the ERV.
- Do not allow water to enter ERV.
- Do not immerse resin parts in water over 60 °C.

1 Open the door by unlocking the latches.

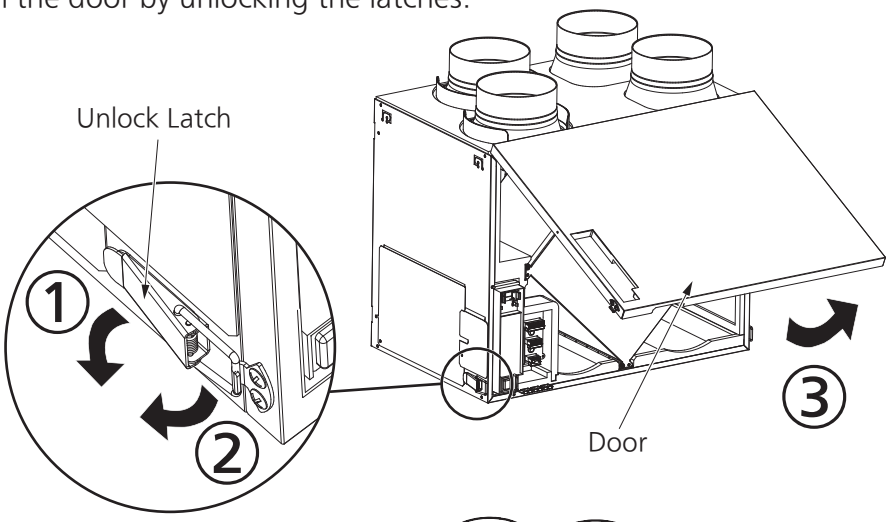

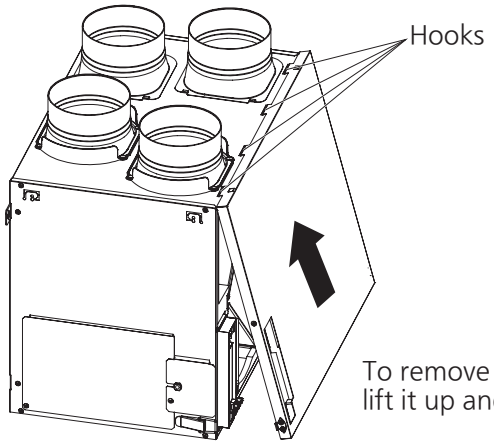

To remove the door, lift it up and unhook.

MAINTENANCE

2 Clean the OA filter, RA filter and energy recovery core.

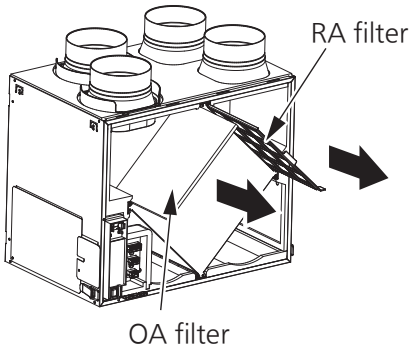

It is suggested to replace the OA filter every 6 months. Please fill in beginning time on new OA filter before replacing. Please replace OA filter by Panasonic Model FV-FL1316VE1 or FV-FL0815VE1 or FV-FL0616VE1.

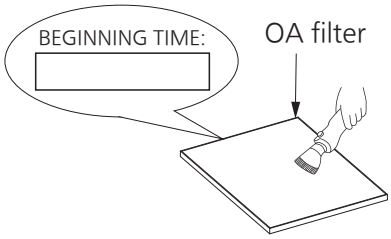

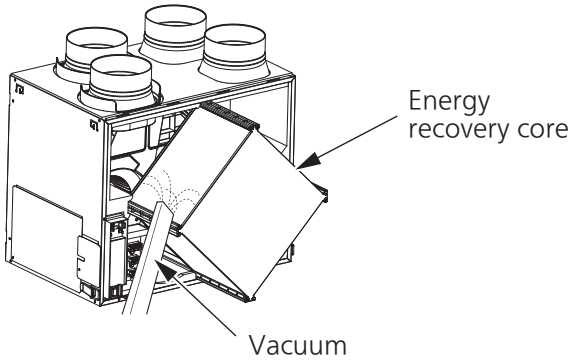

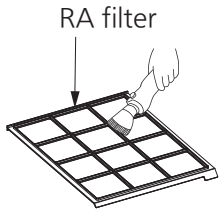

3 Reinstall the filters.

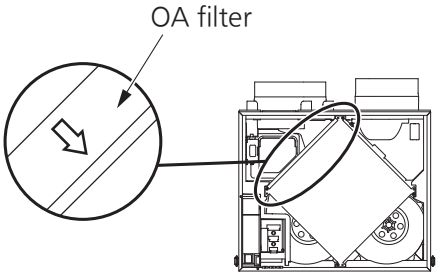

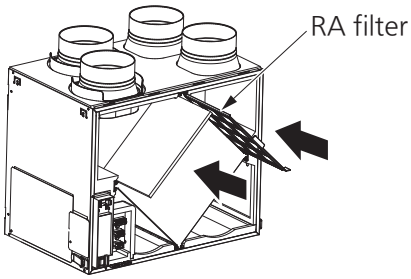

4 Reinstall and close door by locking the latches.

5 Connect power and press filter reset button. When the unit beeps, the filter reset timer will be reset.

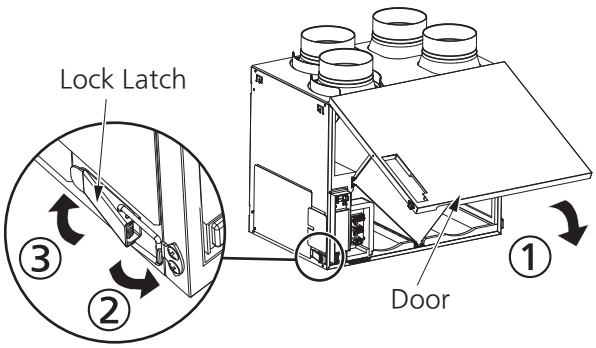

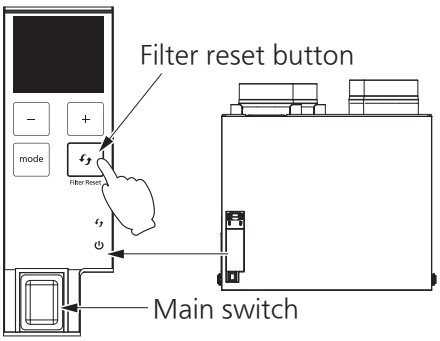

TROUBLESHOOTING

If a problem is encountered, please investigate it by going through the following items.
If the problem still persists, please disconnect the power and contact the dealer for repair.

Problem	Display	Running indicator (Green)	Filter indicator (Orange)	Action
1.The ERV doesn't work.	-	Off	Off	■ Check the power is connected. ■ Check the door is closed. ■ Check that the main switch on the product is on. ■ Check if the spring on the inside of the door is damaged or deformed.
		On	Off	■ ERV running interval according to the ASHRAE time setting. ■ When outdoor temperature is very low ERV stops operating automatically.(see P.4)
2.The HVAC/AHU doesn't work when ERV works.	-	On	Off	■ Check the wiring connection. (P.6-7)
3.Alarm sounds (10 sec every hour) and ERV works.	-	On	On	■ The RA filter and OA filter need to be maintained. If you do not want the buzzer notification, see configuration setting (p.16-17).
4.Alarm sounds (30 sec every hour) and ERV doesn't work.	F03	Blink	Off	■ PCB error, please disconnect the power and contact the dealer for repair.
	F10	Blink	Off	■ OA temperature sensor error, please disconnect the power and contact the dealer for repair.
	F20	Blink	Off	■ SA motor error, please disconnect the power and contact the dealer for repair.
	F21	Blink	Off	■ EA motor error, please disconnect the power and contact the dealer for repair.
	F60	Blink	Off	■ Supply air flow is significantly decreasing. Check the ducting and the filter.
	F61	Blink	Off	■ Exhaust air flow is significantly decreasing. Check the ducting and the filter.
5.Alarm sounds (30 sec every hour) and ERV works.	F01	Blink	Off	■ Wall control communication error. Check the wall control wiring.(P.6-7)
	F04	Blink	Off	■ PCB communication error. Contact the dealer for repair. *
	F11	Blink	Off	■ OA humidity sensor error. Contact the dealer for repair. *
	F12	Blink	Off	■ RA temperature sensor error. Contact the dealer for repair. *
	F13	Blink	Off	■ RA humidity sensor error. Contact the dealer for repair. *
	F30	Blink	Off	■ Damper error, please disconnect the power and contact the dealer for repair.
	H60	Blink	Off	■ Supply air flow is decreasing. Check the ducting and the filter.
	H61	Blink	Off	■ Exhaust air flow is decreasing. Check the ducting and the filter.

*Some functions will be limited when this error is encountered.

TROUBLESHOOTING

Problem	Display	Running indicator (Green)	Filter indicator (Orange)	Action
6. ERV behaves differently from the selected air flow settings.	-	On	Off	■ When product runs in recirculation mode for frost prevention, the air volume will be more than setting and sound will be slightly louder than normal operation. ■ When outdoor temperature is less than 23 °F (-5 °C), the product will restrict air volume automatically to protect energy recovery core.

Wi-Fi Control Module

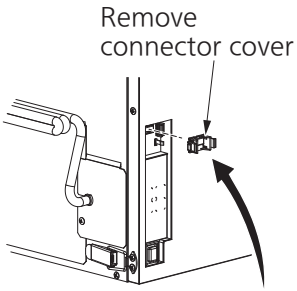

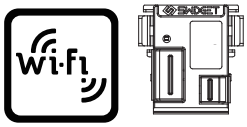

SCAN QR CODE FOR Wi-Fi MODULE'S INSTRUCTION OR VISIT WEB SITE

http://WP100PBA-QR.swidget.com
www.swidget.com

■ WP100PBA Swidget® Wi-Fi Control Module (sold separately)

Wi-Fi Plug'N Play™ features
- Wireless Plug 'N Play™ control module for Panasonic ventilation products.
- Connect and control Panasonic ventilation products with the Swidget iOS or Android app through 2.4 GHz Wi-Fi and/or Bluetooth mesh.

Swidget app features
- Control the air flow settings of all compatible Panasonic ventilation products with an always-ON or timer.
- View the supply air and exhaust air CFM, temperature and humidity of compatible Panasonic ventilation products.
- Receive notifications for faults, filter replacement and filter cleaning for compatible Panasonic ventilation products.
- Monitor the energy consumption of compatible Panasonic ventilation products.

⚠ WARNING

- Turn off power at the circuit breaker or fuse and test that the power is off before installing or removing any module.
- Not for use to control medical or life support equipment.
- For INDOOR use only: 0°C - 40°C (32°F - 104°F).
- Module can only be installed in one orientation. Rear alignment pins prevent incorrect installation. Do not forcibly install a module.
- Requires a wireless router and Internet connection for device setup.
- Double check any external Wi-Fi settings for accuracy before using them.
- Actual wireless performance in a home depends on floor plan and router location.

SPECIFICATIONS

<Ventilation Performance>

Model No.	Voltage (V)	Frequency (Hz)	Duct	Static pressure	Net air flow (CFM)		Power consumption (W)	Weight lb.(kg)
					Exhaust	Supply	Fan unit	
FV-16VEC1T FV-16VEC1S	120	60	6″	0.2″WG	160	160	185	46 (20.9)
				0.4″WG	160	160	200	
FV-13VEC1T FV-13VEC1S	120	60	6″	0.2″WG	130	130	119	46 (20.9)
				0.4″WG	130	130	145	
FV-15VE1T FV-15VE1S	120	60	6″	0.2″WG	150	150	110	45 (20.4)
				0.4″WG	150	150	130	
FV-12VE1T FV-12VE1S	120	60	6″	0.2″WG	120	120	75	45 (20.4)
				0.4″WG	120	120	95	

<Energy Performance>

Model No.	Mode	Supply temperature		Net air flow		Power consumption (W)	Sensible recovery efficiency	Adjusted sensible recovery efficiency	Net moisture transfer
		°F	°C	L/s	CFM				
FV-16VEC1T FV-16VEC1S	Heating	32	0	17	36	25	82	84	0.81
		32	0	31	66	44	79	81	0.74
		32	0	61	130	109	73	75	0.64
		-13	-25	31	65	163	60	65	0.60
	Cooling						Total recovery efficiency		
		95	35	17	36	26	73		
		95	35	31	66	48	68		
		95	35	57	120	110	61		

Model No.	Mode	Supply temperature		Net air flow		Power consumption (W)	Sensible recovery efficiency	Adjusted sensible recovery efficiency	Net moisture transfer
		°F	°C	L/s	CFM				
FV-13VEC1T FV-13VEC1S	Heating	32	0	17	36	26	81	83	0.80
		32	0	31	66	48	78	80	0.73
		32	0	59	125	109	73	75	0.63
		-13	-25	31	65	163	60	65	0.60
	Cooling						Total recovery efficiency		
		95	35	17	36	27	71		
		95	35	31	66	50	67		
		95	35	57	120	112	58		

Model No.	Mode	Supply temperature		Net air flow		Power consumption (W)	Sensible recovery efficiency	Adjusted sensible recovery efficiency	Net moisture transfer
		°F	°C	L/s	CFM				
FV-15VE1T FV-15VE1S	Heating	32	0	17	36	20	77	79	0.67
		32	0	31	66	33	73	75	0.58
		32	0	71	150	98	64	66	0.50
	Cooling						Total recovery efficiency		
		95	35	17	36	23	70		
		95	35	31	66	37	64		
		95	35	57	120	102	53		

Model No.	Mode	Supply temperature		Net air flow		Power consumption (W)	Sensible recovery efficiency	Adjusted sensible recovery efficiency	Net moisture transfer
		°F	°C	L/s	CFM				
FV-12VE1T FV-12VE1S	Heating	32	0	17	36	22	76	78	0.66
		32	0	31	66	35	72	74	0.57
		32	0	57	120	73	65	67	0.49
	Cooling						Total recovery efficiency		
		95	35	17	36	24	68		
		95	35	31	66	39	61		
		95	35	52	110	77	53		

The testing of the ventilation performance and the energy performance is in accordance with CSA-C439-18 standard.

Panasonic Corporation of North America
2 Riverfront Plaza
Newark, NJ 07102

Panasonic Ventilating Fan
Limited Warranty

Panasonic Corporation of North America ("the Warrantor") will, at its sole discretion, replace this product with new parts or exchange this product, free of charge, in the USA, in the event of defects in material or workmanship in accordance to the following:

ALL Parts: For period of 3 years (36 months)
DC Motor: For period of 6 years (72 months)
LED Light Unit: For period of 5 years (60 months)

Service, in the USA, can be obtained during the warranty period by contacting the selling Distributor or Panasonic Customer Call Center at 1-866-292-7299, toll free.

This warranty does not cover labor charges for removal and installation of parts. This warranty is extended only to the original purchaser of a new product, which was not sold "as is", who purchased the product either directly from the Warrantor or from the Warrantor's authorized resellers (including authorized retail and Internet-based sellers), unless otherwise prohibited by law.

This warranty only applies to products purchased in the United States.

To claim warranty proof of purchase date will be required, in addition to fan model and serial number as shown in the photos below.

Example of display

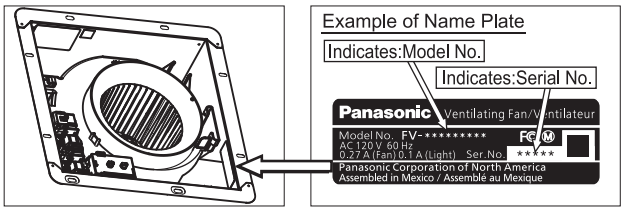

Ceiling Insert Type Vent-Fan Name Plate

This warranty only covers failures due to defects in materials or workmanship that occur during normal use and does not cover shipping damages, whether visible or concealed, normal wear or cosmetic damage. The warranty does not cover failures that are caused by products and peripherals not supplied by the Warrantor, or failures which result form accident, misuse, abuse, negligence, mishandling, misapplication, alteration, modification, faulty installation, improper setups or adjustments, improper or lack of maintenance, alterations or modifications, power line surge, improper line voltage, lightning damage, or damage that is attributable to acts of God.

LIMITS AND EXCLUSIONS

There are no express warranties except as listed above. THE WARRANTOR SHALL NOT BE LIABLE FOR INCIDENTAL CONSEQUENTIAL, OR PUNITIVE DAMAGES, INCLUDING, WITHOUT LIMITATION, LOSS OF GOODWILL, PROFITS OR REVENUE, LOSS OF USE OF THIS PRODUCT OR ANY ASSOCIATED EQUIPMENT, COST OF SUBSTITUTE PRODUCT, DOWNTIME COST, OR CLAIMS OF ANY PARTY DEALING WITH BUYER FOR SUCH DAMAGES, RESULTING FROM THE USE OF THIS PRODUCT OR ARISING FROM BREACH OF WARRANTY OR CONTRACT, NEGLIGENCE OR ANY OTHER LEGAL THEORY, EXCEPT AS EXPRESSLY PROVIDED ABOVE. THERE IS NO WARRANTY OR ANY OTHER KIND, EXPRESS OR IMPLIED, THERE ARE NO WARRANTIES WHICH EXTEND BEYOND THE DESCRIPTION ON THE FACE HEREOF.

Some states do not allow the exclusion or limitation of incidental or consequential damages, or limitations on how long an implied warranty lasts, so the above exclusions or limitation may not apply to you.
This warranty gives you specific legal rights and you may also have other rights which vary from state to state.

If a problem with this product develops during or after the warranty period, you may contact your Distributor or Panasonic Customer Call Center. If the problem is not handled to your satisfaction, then write to Panasonic Corporation of North America at the address indicated above.

Customer Services Directory

Obtain Product Information and Operating Assistance; locate your nearest distributor, or make Customer Service and Literature requests by visiting our Web Site at:
us.panasonic.com/ventfans

or send your request by E-mail to:
ventfans@us.panasonic.com

You may also contact us directly at:
1-866-292-7299 Monday-Friday 9 am - 6 pm, EST.

For hearing or speech impaired TTY users, TTY: 1-877-833-8855

Accessory Purchases

Purchase Parts and Accessories for Panasonic Ventilation Products by visiting our Website:

Consumers:
www.buypanasonicparts.com
or send your request by Email to: npcparts@us.panasonic.com
You may also contact us directly at 1-800-332-5368
(Monday-Friday 8am to 6pm, EST.)

Distributors:
Send your request by Email to: npcparts@us.panasonic.com
You may also contact us directly at 1-866-292-7299
(Monday-Friday 9 am - 6 pm, EST.)

Panasonic Consumer Electronics Company
Customer Service Group
2 Riverfront Plaza, Newark, NJ 07102
For hearing or speech impaired TTY users, TTY: 1-877-833-8855

PRODUCT SERVICE

Warning Concerning Removal of Covers.
The unit should be serviced by qualified technicians only.
Your product is designed and manufactured to ensure a minimum of maintenance.
Should your unit require service or parts, call Panasonic Call Center at 1-866-292-7299 (USA) or 1-800-669-5165 (Canada).

For FV-16VEC1T/S and FV-13VEC1T/S

To ensure quiet operation of the ENERGY STAR certified ERV, each product model must be installed using sound attenuation techniques appropriate for the installation.
The way your energy-recovery ventilator is installed can make a significant difference to the electrical energy you use. To minimize the electricity use of energy-recovery ventilator, a stand-alone fully ducted installation is recommended. If you choose a simplified installation that operates your furnace air handler for room-to-room ventilation, an electrically efficient furnace that has an electronically commutated (EC) variable speed blower motor will minimize your electrical energy consumption and operating cost.
Installation of a user-accessible control with your product model will improve comfort and may significantly reduce the product model's energy use.
This product earned the ENERGY STAR® by meeting strict energy efficiency guidelines set by NaturalResources Canada and the US EPA. This product meets ENERGY STAR requirements only when used in Canada.

Panasonic Corporation of North America
Two Riverfront Plaza, Newark, NJ 07102
www.panasonic.com

Panasonic Canada Inc.
5770 Ambler Drive, Mississauga, Ontario L4W 2T3
www.panasonic.com

© Panasonic Corporation 2024-2025

Printed in Mexico
Issue date:02/2025
P0924-2025 16VC1T450B